harman kardon

INSTRUCTION MANUAL

It is essential you read this instruction booklet carefully before installing your high fidelity system. You have invested in an extremely fine electronic instrument into which many excellent engineering developments have been incorporated, and each is important for the proper operation of your system. This booklet has been written in simple non-technical language and if you will take time to read it first before doing anything else, you will find it simple to obtain optimum performance from your Harman-Kardon Model A260 Stereophonic Amplifier.

Be sure to keep this booklet available at all times. It contains indispensable technical and service information.

This is the Harman-Kardon Stereo Symbol. It is your assurance of superb stereo performance.

UNPACKING

After unpacking the Chorale, inspect it carefully for signs of transit damage. The unit was subjected to many inspections and tests prior to final packing, and therefore should be in perfect condition. If damage is visible, notify your dealer at once. If the unit was shipped to you, notify the transportation company without delay.

Check the contents of the carton thoroughly and inspect the folds of the packing material before discarding it. Your package should contain the following items:

1 Chorale, Model A260 Stereophonic Amplifier-Preamplifier.
1 Instruction Booklet.
1 Warranty Card.
1 Mounting Template.

WARRANTY POLICY

We urge you to fill in your warranty card and mail it to the factory without delay to protect your rights under warranty. The warranty cards are carefully filed for reference and should you require information on the use of this high fidelity unit, or repair service, we will be able to identify your set and reply quickly.

NOTE: It is necessary to receive factory authorization before returning a set for warranty repair either to the factory or to an authorized station. Repairs are to be returned on an Express Prepaid basis. A letter describing the exact difficulty must be enclosed with the unit.

WARRANTY

We warrant each Model A260 to be free from defects in material and workmanship under normal use and service, and in accordance with the conditions herein below set forth, for a period of 1 year from date of delivery to the original purchaser, and agree to replace or repair any part or parts, with the exception of tubes which are under the manufacturer's 90 days warranty, returned to us within said 1 year, with transportation prepaid and which our examination shall disclose to our satisfaction to have been thus defective. This warranty does not include free labor, nor is it applicable to any instrument which shall have been repaired or altered in any way so as in our judgment to affect its stability or reliability nor which has been subject to neglect, misuse, abuse, negligence or accident nor which has had the serial number altered, effaced, or removed. Neither shall this warranty apply to any instrument which has been connected otherwise than in accordance with instructions furnished by us.

This warranty is expressly in lieu of all other warranties, express or implied, and of all other obligations or liability on our part, and we neither assume nor authorize any representative or other person to assume for us any other liability in connection with the sale of this instrument.

INSTALLATION PROCEDURE

Ventilation:

The unit is well ventilated in itself, but sufficient space must be allowed around it to permit proper air flow. Install the amplifier in a manner to allow for unrestricted circulation. Do not place books or other objects on the cage or in the immediate vicinity of the instrument. Reducing the air flow will result in sharply reduced component and tube life. Allow at least 4 inches above the unit for cabinet installation.

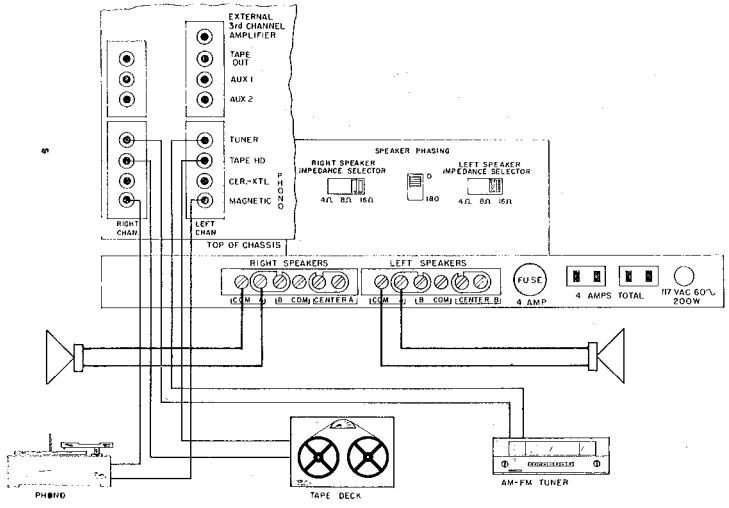

Power Requirement:

Plug the AC cord into any outlet furnishing 117 volts 50 or 60 cycle AC current. The voltage may vary between 105 and 125 volts. Two AC convenience outlets are located on the rear panel of the instrument. Auxiliary equipment (tape deck, record player, additional amplifier) may be plugged into these outlets and will be controlled by the illuminated push-button on/off switch on the front panel.

Connecting Your Speakers:

Your two speakers should be matched if possible to obtain optimum results and should be placed approximately 8 to 15 feet apart against one wall of your listening room. Corner placement is also quite acceptable. Facing the speakers straight out or slanting them slightly will depend on your room size, acoustic effect and where you will be seated for listening. It may be necessary to experiment with speaker placement until best results are obtained.

Use any type wire to connect your speakers. Lamp cord is excellent and may be easily dressed around the molding for an inconspicuous and neat installation.

The unique switching arrangement on the Model A260 enables you to connect your speakers in any of several ways. Follow the diagrams listed below for the installation best suited for your use.

Stereo In Room A. No Speakers In Room B:

Connect both leads from the left speaker in Room A to terminals A and COM on the LEFT SPEAKER OUTPUT strip. Connect both leads from the right speaker in Room A to terminals A and COM on the RIGHT SPEAKER OUTPUT strip. The shorting bars between all terminals on the SPEAKER OUTPUT strips must remain connected for this method of operation. Refer to diagram 1.

The IMPEDANCE SELECTOR switches located on the rear of the chassis should be placed in the 4, 8 or 16 ohm position depending upon the nominal impedance rating of your speakers.

To operate, the CENTER SPEAKER and the STEREO SPEAKER SELECTOR switches located on the front panel may remain in any position since they are inoperative in this application.

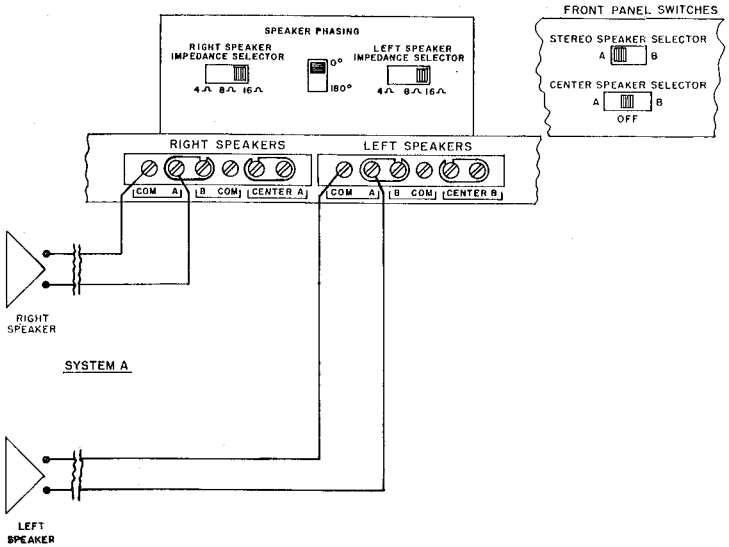

Diagram 1.

Stereo In Room A. Stereo In Room B:

It is recommended you connect one stereo speaker system at a time.

Remove the shorting bars between the A and B SPEAKER OUTPUT terminals on both the right and left output strips.

Connect both leads from the left speaker in Room A to terminals A and COM on the LEFT SPEAKER OUTPUT strip. Connect both leads from the right speaker in Room A to terminals A and COM on the RIGHT SPEAKER OUTPUT strip. Now connect the two leads from the left speaker in Room B to terminals B and COM on the LEFT SPEAKER OUTPUT strip, and two leads from the right speaker in Room B to terminals B and COM on the RIGHT SPEAKER OUTPUT strip.

The shorting bars on CENTER A and B terminals must remain connected. Refer to Diagram 2 below.

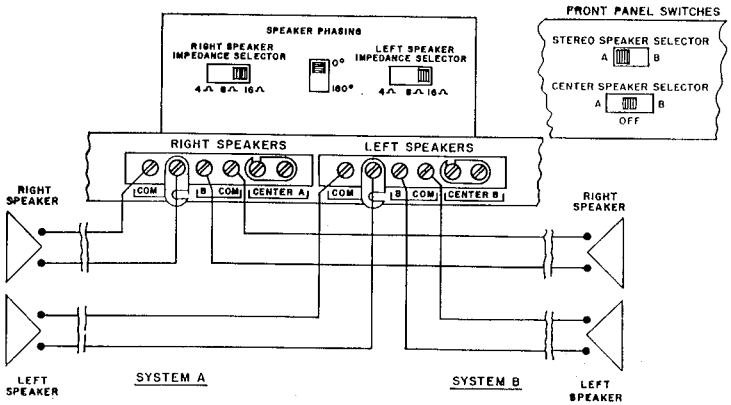

Diagram 2.

6. To play three speaker stereo in Room A or single speaker monophonic in Room B, set the CENTER SPEAKER SELECTOR switch and the STEREO SPEAKER SELECTOR switch to "A". To play only single speaker monophonic in Room B, throw the CENTER SPEAKER SELECTOR switch to "B" and allow the STEREO SPEAKER SELECTOR switch to remain in the "A" position. The reversal of this application applies to play a single monophonic speaker in Room A and three stereo speakers in Room B.

Single Monophonic Speaker In Room A. Single Monophonic Speaker In Room B:

Remove the shorting bars on the CENTER SPEAKER OUTPUT strips. Terminals A and B on the LEFT and RIGHT SPEAKER OUTPUT strips remain strapped for this type of installation.

Connect both leads from the single monophonic speaker in Room A to both CENTER A terminals on the LEFT SPEAKER OUTPUT strip. Connect a 4 ohm, 20 watt resistor across terminals A and COM on the LEFT SPEAKER OUTPUT strip.

Connect both leads from the single monophonic speaker in Room B to both CENTER B terminals on the RIGHT SPEAKER OUTPUT strip. Connect a 4 ohm, 20 watt resistor across terminals A and COM on the RIGHT SPEAKER OUTPUT strip. Refer to Diagram 7 below.

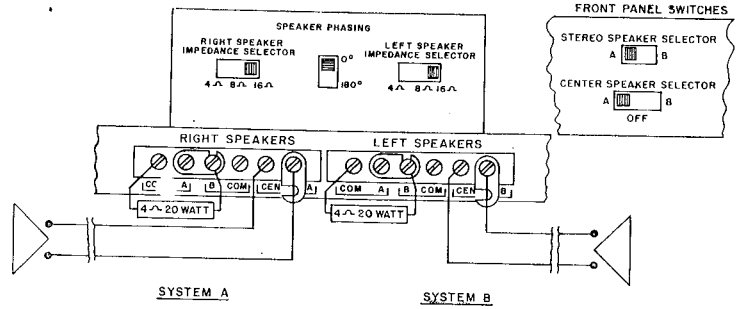

Diagram 7.

The SPEAKER IMPEDANCE switches located on the rear of the chassis should be placed in the 4, 8 or 16 ohm position depending upon the nominal impedance rating of the speakers.

To operate, the front panel speaker switches must be set as follows:

1. To play the single monophonic speaker in Room A, set the CENTER SPEAKER SELECTOR switch to "A". The STEREO SPEAKER SELECTOR switch may remain in any position for in this application it is inoperative.
2. To play the single monophonic speaker in Room B, set the CENTER SPEAKER SELECTOR switch to "B". The STEREO SPEAKER SELECTOR switch may remain in any position for in this application it is inoperative.

Connecting Your Tuner:

The FM output of your Harman-Kardon stereo tuner should be connected to the LEFT CHANNEL TUNER input jack located on the top rear of the chassis. The AM output should be connected to the RIGHT CHANNEL TUNER input jack. The same method applies if you are using separate FM and AM tuners. Plug the AC line cord of your tuner into one of the AC convenience outlets located on the rear of the chassis. If you are using a monophonic tuner connect the tuner output to either the RIGHT or LEFT TUNER input receptacle.

Connecting Your Stereo Record Player:

A stereo cartridge uses two output plugs. If you are using a magnetic type low output cartridge plug one of the output leads into the LEFT CHANNEL

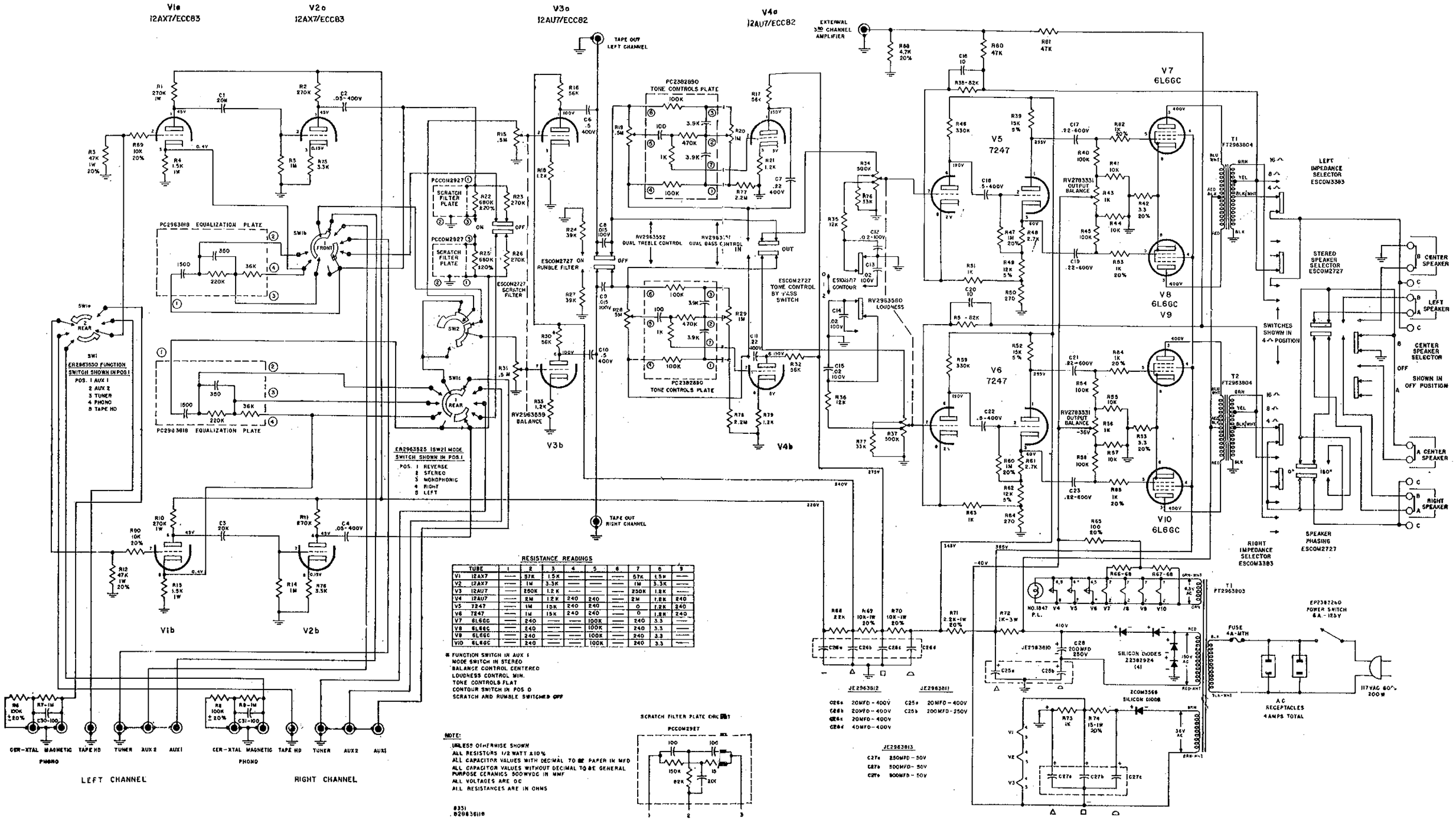

RESISTANCE READINGS

TUBE	1	2	3	4	5	6	7	8	9
V1 12AX7	—	57K	1.5K	—	—	—	57K	1.5M	—
V2 12AX7	—	1M	3.3K	—	—	—	1M	3.3K	—
V3 12AU7	—	250K	1.2K	—	—	—	250K	1.2K	—
V4 12AU7	—	2M	1.2K	240	240	—	2M	1.2K	240
V5 7247	—	1M	15K	240	240	—	0	1.2K	240
V6 7247	—	1M	15K	240	240	—	0	1.2K	240
V7 6L6GC	—	240	—	—	100K	—	240	3.3	—
V8 6L6GC	—	240	—	—	100K	—	240	3.3	—
V9 6L6GC	—	240	—	—	100K	—	240	3.3	—
V10 6L6GC	—	240	—	—	100K	—	240	3.3	—

* FUNCTION SWITCH IN AUX 1
MODE SWITCH IN STEREO
BALANCE CONTROL CENTERED
LOUDNESS CONTROL MIN.
TONE CONTROLS FLAT
CONTOUR SWITCH IN POS 0
SCRATCH AND RUMBLE SWITCHES OFF

NOTE:
UNLESS OTHERWISE SHOWN
ALL RESISTORS 1/2 WATT ±10%
ALL CAPACITOR VALUES WITH DECIMAL TO BE PAPER IN MFD
ALL CAPACITOR VALUES WITHOUT DECIMAL TO BE GENERAL PURPOSE CERAMICS 500WVDC IN MMF
ALL VOLTAGES ARE DC
ALL RESISTANCES ARE IN OHMS

8331
.029836118

Stereo Spkr. Sel.
A - B
Center Spk. Sel.
A - off - B

Contours
0 - 1 - 2

Dames.

Rumble filter
off - on

Scratch filter
off - on
Tone Control
out - in

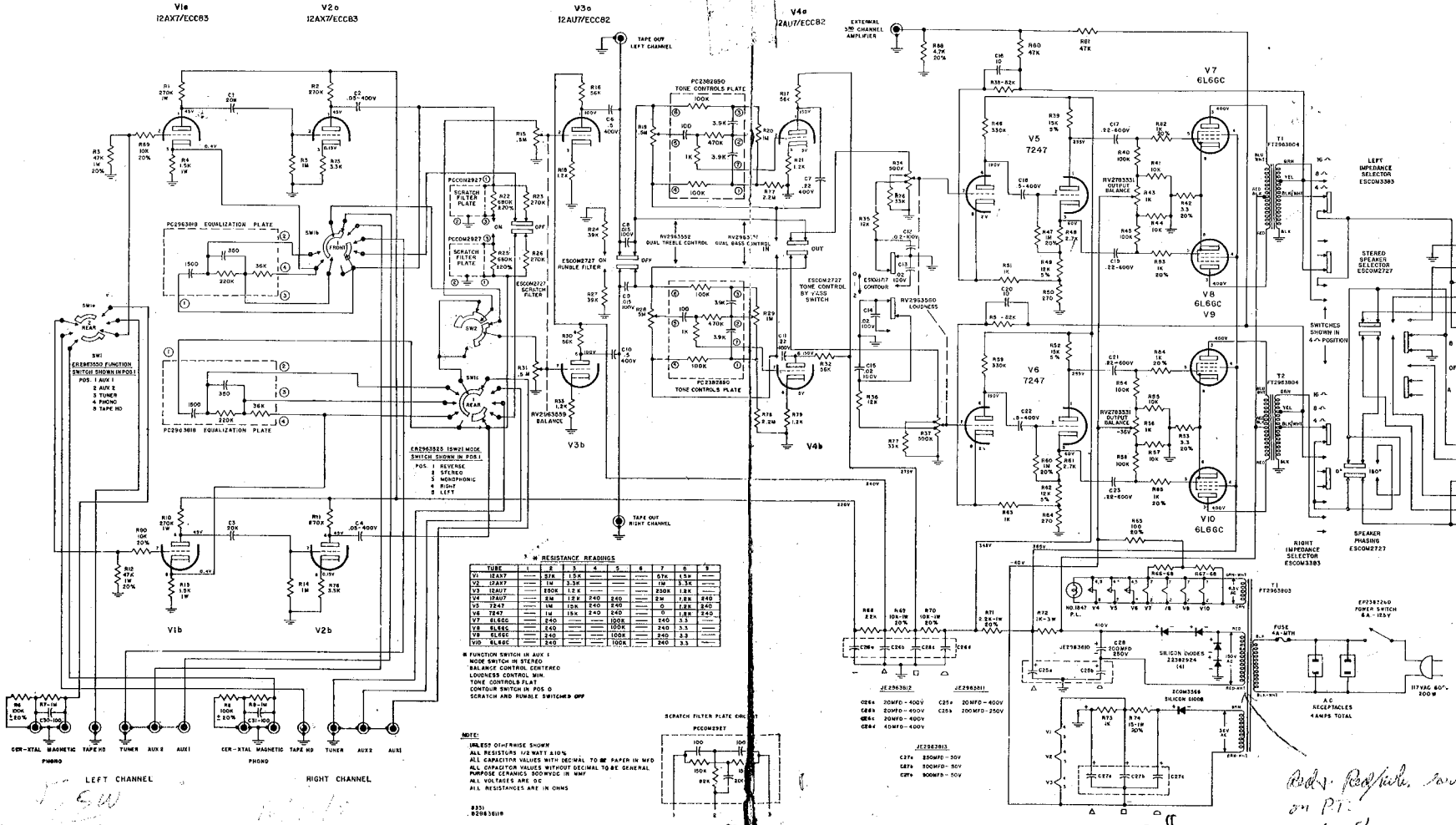

RESISTANCE READINGS

TUBE	1	2	3	4	5	6	7	8	9
V1 12AX7	—	57K	1.5K	—	—	—	67K	1.5K	—
V2 12AX7	—	1M	3.3K	—	—	—	1M	3.3K	—
V3 12AU7	—	250K	1.2K	—	—	—	250K	1.2K	—
V4 12AU7	—	2M	1.2K	240	240	—	2M	1.2K	240
V5 7247	—	1M	15K	240	240	—	0	1.8K	240
V6 7247	—	1M	15K	240	240	—	0	1.8K	240
V7 6L6GC	—	240	—	—	100K	—	240	3.3	—
V8 6L6GC	—	240	—	—	100K	—	240	3.3	—
V9 6L6GC	—	240	—	—	100K	—	240	3.3	—
V10 6L6GC	—	240	—	—	100K	—	240	3.3	—

FUNCTION SWITCH IN AUX 1
MODE SWITCH IN STEREO
BALANCE CONTROL CENTERED
LOUDNESS CONTROL MIN.
TONE CONTROLS FLAT
CONTOUR SWITCH IN POS 0
SCRATCH AND RUMBLE SWITCHED OFF

Rd's. Red/blk. reversed on P.T.

$\frac{15}{\times 15}$ = 225

$\frac{28}{\times 28}$ = 784

$8 \overline{)140}$ = 18, 8, 64

MAGNETIC input jack and the other lead into the RIGHT CHANNEL MAGNETIC input jack. Connect your monophonic magnetic cartridge to either the RIGHT or LEFT MAGNETIC input receptacle.

Stereo crystal or ceramic cartridges may also be used with this amplifier. They must be plugged into the LEFT and RIGHT CHANNEL CER-XTAL input jacks. Connect your monophonic ceramic or crystal cartridge to either the RIGHT or LEFT CER-XTAL receptacle.

Connecting Your Stereo Tape Player:

A stereophonic tape deck utilizes two playback heads usually contained in one head assembly. Each head has its own output plug. Connect one plug to the LEFT CHANNEL TAPE HD input jack and the other plug to the RIGHT CHANNEL TAPE HD input jack. Connect your monophonic tape deck to either the RIGHT or LEFT TAPE HD receptacle.

Connecting Your Stereo Tape Recorder:

Since most stereophonic tape recorders have their own preamplifiers, it is not desirable to plug the output of the recorder into the TAPE HD input jacks. This might result in overloading of the input stage and cause distortion. Connect one of the output plugs into the LEFT CHANNEL AUX 1 or AUX 2 input jacks and the other plug into the RIGHT CHANNEL AUX 1 or AUX 2 input jacks. Connect your monophonic tape recorder to either the RIGHT or LEFT AUX 1 or AUX 2 receptacle.

Connecting Your Tape Recorder To Make A Recording:

Provision is made on your Model A260 to permit the recording of any program material. Connect the left input of your stereo tape recorder to the jack marked LEFT CHANNEL TAPE OUT and the right input of your stereo tape recorder to the jack marked RIGHT CHANNEL TAPE OUT. To connect a monophonic tape recorder, connect its input to either the LEFT or RIGHT CHANNEL TAPE OUT receptacle. If the program source you desire to record is plugged into the left preamplifier channel, use the LEFT TAPE OUT jack, and if it is plugged into the right preamplifier channel, use the RIGHT TAPE OUT jack. This will enable you to make a recording with the proper recording equalization as determined by your recorder, while simultaneously monitoring the program with the proper tone control, contour and loudness setting.

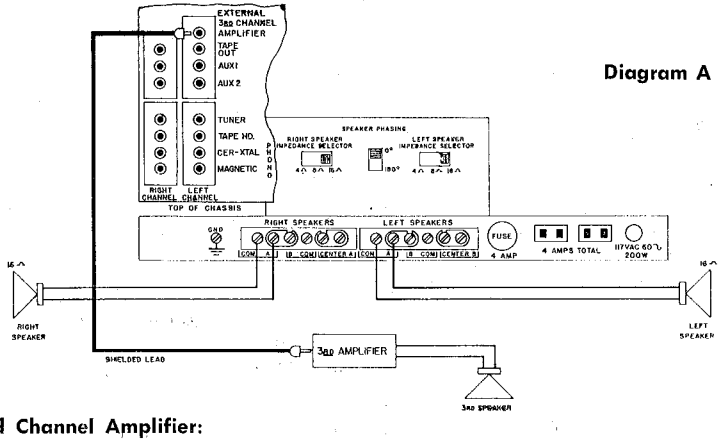

Diagram A

Third Channel Amplifier:

There are many reasons why current stereophonic amplifiers must offer a way to connect a center channel speaker system. Auditoriums and large rooms at times require a center channel speaker to retain the stereophonic effect. Also, there are many new speaker systems which require a center channel power the amplifier in the same manner as outlined in the above procedure. The "hot" output of the right pickup coil will be connected with another insulated shielded lead to its receptacle on the amplifier. However, the shield is to be grounded ONLY at the amplifier end, and left floating at the record player end. The record player chassis is treated in the identical manner as described in the previous paragraphs.

In any high fidelity system hum and noise may also be caused by other factors. A common cause of hum may be the interconnection of a record player, tuner and amplifier, as a result of the cables and different ground potentials. If hum is experienced and it cannot be traced to improper grounding of the phono cartridge or turntable, disconnect everything but the speaker from the A260. If hum persists, reverse the AC line cord in the socket. Also perform the hum balancing adjustment outlined in the next paragraph. Plug in the record player and if hum appears, reverse the record player AC line cord. Connect your other devices in a similar manner. CAUTION: Hum may be also induced by defective interconnecting cables or by running these cables too close to strong AC fields.

ADJUSTMENTS

Output Tube Balance Controls:

There are two output tube balance controls located between the output tubes. They are accessible from below when the bottom plate is removed and from above when the cage is removed.

These controls are factory adjusted and should not be touched unless tubes are changed. If adjustment is necessary follow the procedure listed below.

1. Set the volume control to minimum volume.
2. Turn off all auxiliary equipment connected to the A260.
3. Slowly rotate the control for minimum hum.
4. If it is not possible to hear hum in your speakers, set the balance control to the mid-position.
5. For absolute perfection adjust the balance control on an IM distortion analyzer for minimum intermodulation distortion.

MAINTENANCE AND REPAIRS

Fuse:

In the event of a potentially damaging failure of tubes or components, the Model A260 is protected by a 4 ampere MTH fuse, located on the rear of the unit. If this fuse is blown, it should be replaced only with one of the same rating. Replacing with a fuse of higher rating will not protect the amplifier, and may result in severe damage, which will not be covered by the factory warranty.

Repair:

Only the most qualified service technician should be employed, as special equipment and training is required to properly service a high fidelity amplifier. This manual contains information of great value to the repairman, and should be kept available.

Factory Warranty Stations are maintained in most major cities. For the address of the nearest one, or for any other information relating to your Harman-Kardon products, write to the attention of the Customer Service Department, Harman-Kardon, Inc., 520 Main St., Westbury, N. Y. Be sure to include the model and serial number of the set in question. A short description of your complete installation is often of help in answering your questions.

A260 REPLACEMENT PARTS LIST

Part No.	Description	Price
ESCOM3855	Slide Switch	.50
ESCOM3856	Slide Switch	.75
2963803	Power Transformer	20.00
JE2963804	Output Transformer	18.50
JE2963810	200/250V Electrolytic	4.00
JE2963811	200/250V-20/400V Electrolytic	3.50
JE2963812	20-20-20-40/450V Electrolytic	3.25
JE2963813	500-500-250/50V Electrolytic	4.00
RV2783331	1K Ohm Balance Potentiometer	.75
HC33901	Fuse Receptacle	.75
ZCOM3299	4 Amp 3 AG Fuse	.20
ER2963550	Function Switch	2.75
ER2963825	Mode Switch	1.50
RV2963559	Balance Control	2.00
RV2963560	Loudness Control	2.75
RV2963551	Bass Control	2.50
RV2963552	Treble Control	2.50
EP2383260	Power Switch	1.35
PC2382890	Baxendal Tone Network	1.35
PCOM2927	Scratch Filter	.80
PC2963818	Equalization Network	.90
JE2382720	125/250V Electrolytic	2.25
JE2963542	500/25V Minimite Capacitor	1.75
Z2382924	Silicon Diode .5 Amp/300V Piv	3.50
ZCOM3566	Selenium Rectifier	2.25
P2963524	Escutcheon	15.00
L2963548	Instruction Book & Mtg Template	1.00
PCOM3601	Dummy Knob	.50
PCOM3602	Rear Knob	.50
PCOM3602	Front Knob	.50

TECHNICAL SPECIFICATIONS

AUDIO

Circuits:	Two 6L6GC output tubes per channel tetrode connected, operated conservatively in Class AB_1, fixed bias. Baxendal tone controls, DC heaters on preamplifiers and ECC82 voltage amplifier. Special phase inverter designed for low distortion and high gain with minimum phase shift.
Output Level:	30 watts per channel, 60 watt peaks. Less than 0.5% harmonic distortion at full output. Less than 0.2% harmonic distortion at 5 watts.
Output Impedance:	4, 8 and 16 ohms per channel.
Frequency Response:	± 0.5 db 15-30,000 cycles per second at 1 watt. Excellent listening characteristics achieved by use of special grain oriented high permeability cores in both output transformers for exceptionally wide frequency response and improved transients.
Channel Cross Talk:	Better than 50 db.
Minimum Volume Hum:	95 db below 30 watts.
High Level Hum:	85 db below 30 watts.
Low Level Phono Hum:	75 db below 30 watts.
Tape Head Input Hum:	65 db below 30 watts.
Tone Controls:	New friction-clutch type controls for separate or ganged action. Range of bass and treble is ± 16 db at 50 and 10,000 cycles per second. Special front panel tone control defeat switch to by-pass tone controls completely. This feature eliminates tone control phase shift even when the controls are in the flat position, and insures clean, transparent sound.
Regulation:	B+ regulation is held to within 1% by use of silicon diode power supply, and special power transformer. This provides cleanly defined low frequency response and superb overload characteristics.
Rumble Filter:	Subsonic filter to eliminate record and turntable rumble. 12 db per octave below 50 cycles per second.
Scratch Filter:	Rolls off objectionable record scratch at 12 db per octave above 6,000 cycles per second.
Input Levels:	High level inputs: 300 millivolts, ½ megohm. Low level phono: 3 millivolts at 1 KC. High level phono: 60 millivolts at 1 KC. Tape: 1 millivolt at 250 cycles per second.
Tape Output Recording Level:	2 volts from each channel, unmodified by volume and tone controls.
Equalization:	Phono: RIAA Tape: NARTB

Special Features:	Illuminated push-button on/off switch. Separate output receptacle for third channel amplifier. Exclusive third channel speaker selector switches permit the operation of remote speakers in any of the following ways: 1. Stereo in one room. 2. Stereo in one room, monophonic in another. 3. Stereo with 3rd channel in one room, monophonic in another. 4. Stereo in one room, stereo in another. 5. Stereo with 3rd channel in one room, stereo in another. 6. Stereo with 3rd channel in one room, stereo with 3rd channel in another.
Construction:	The use of the finest components operated conservatively for long life and trouble free performance. Point to point wiring. Components are mounted by wrapping, crimping and then soldering to insure low noi and rigidity.

OVERALL SPECIFICATIONS

Front Panel Controls:	Treble (dual), Bass (dual), Loudness, Balance, M (Reverse, Stereo, Monophonic, Right and Left), F tion Selector (Aux-1, Aux-2, Tuner, Phono-RIAA, Tape Head-NARTB), 2 Speaker Selector Switches, Contour Switch, Illuminated push-button on/off switch, Rumble Filter, Scratch Filter, Tone Control Defeat Switch.
Duel Stereo Input Receptacles:	Aux-1, Aux-2, Tuner, Tape Head, Ceramic-Xtal Phono, Magnetic Phono.
Output Receptacles:	2 Tape Outputs, 1 Third Channel amplifier Output.
Chassis Controls:	Two output tube balancing controls left and right channels for minimum IM distortion settings.
Rear Panel Controls:	Right and Left Impedance Selector Switches (4, 8 and 16 ohms); Speaker Phasing Switch.
Rear Terminal Connections:	Speaker connections. Ground lug.
Convenience AC Receptacles:	Two, controlled by front panel push-button on/off switch.
Fuse:	Externally accessible, fuses transformer primary.
Tube Complement:	(Total 10) 4-6L6GC, 2-ECC82/12AU7, 2-7247, 2-ECC83/12AX7. 4 Silicon Diode Rectifiers. 2 Silicon Rectifiers for bias and filament supply.
Dimensions:	15¼" wide x 4⅞" high x 13⅞" deep (excluding knobs).